THE BEHEMOTH'S ANVIL

FULL PORT SIDE ELEVATION

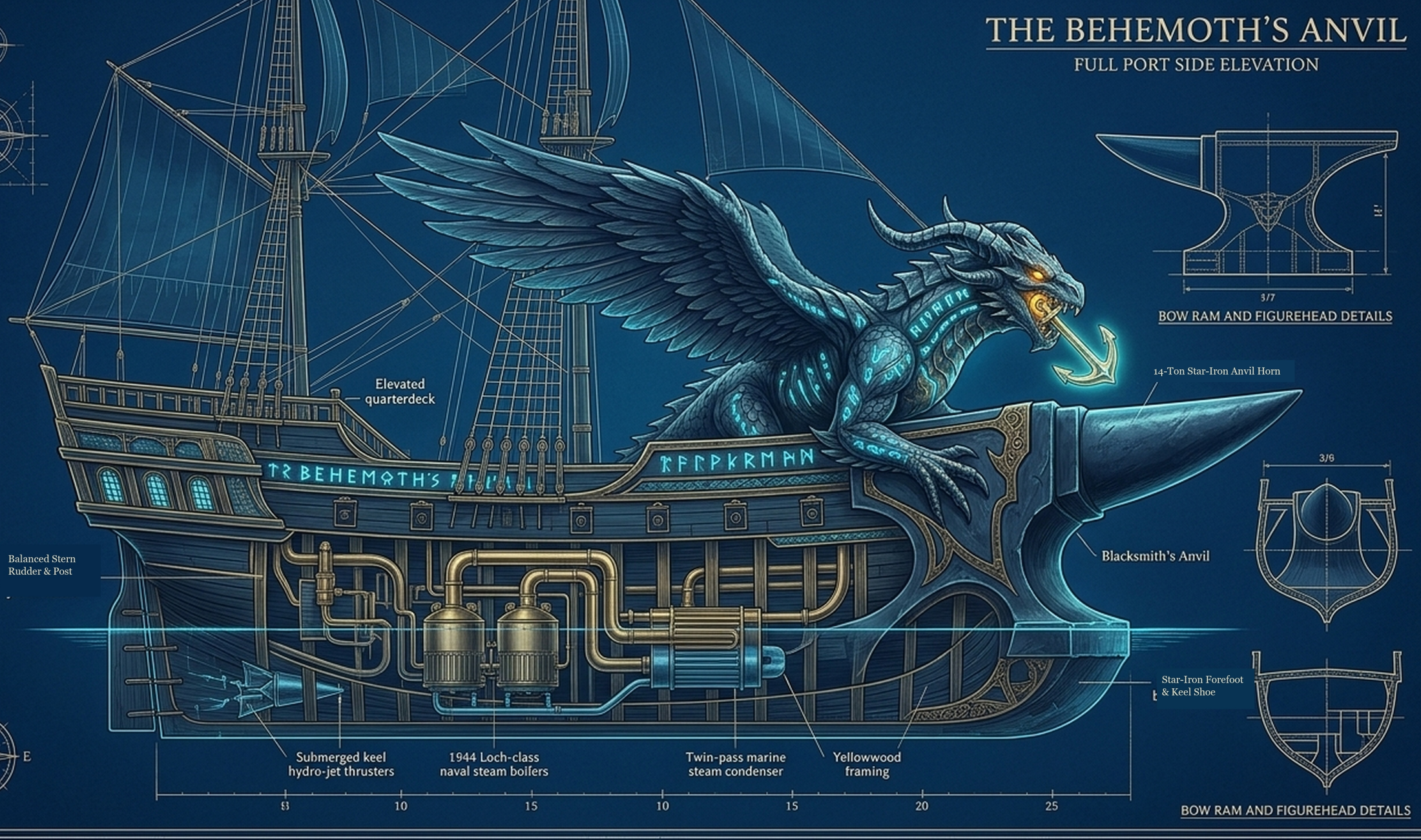

BOW RAM AND FIGUREHEAD DETAILS

BOW RAM AND FIGUREHEAD DETAILS

I. PRINCIPAL PARTICULARS & HULL GEOMETRY

VESSEL DESIGNATION:	HMS / SAS The Behemoth's Anvil (Special Survey)
LENGTH OVERALL (LOA):	248 ft 6 in (75.74 m) incl. Star-Iron Anvil Horn
LENGTH BP / BEAM:	218 ft 0 in (LBP) | 38 ft 4 in Extreme Moulded Beam
DRAUGHT & DISPLACEMENT:	16 ft 8 in Loaded | 1,840 Tons Full Ocean Displacement
ACOUSTIC FRAMING:	Seasoned Outeniqua Yellowwood & Natal Ironwood Ribs
EXTERIOR ARMOUR:	1860 SS Truro Phosphor-Bronze over 1944 SAS Natal Steel
HYDROSTATIC STABILITY:	Hanny Ramith Plumb-Line Keel Pendulum & Mercury Ballast

II. BOW-RAM, FIGUREHEAD & PROPULSION PLANT

BOW-RAM ASSEMBLY:	14-Ton Monolithic Meteoric Star-Iron Blacksmith's Anvil
ANVIL PROFILED HORN:	Tapered Conical Ice & Reef-Breaker Ram (Quenched in Gangajal)
PROW FIGUREHEAD:	Winged Dragon-Chimera Crouched on Anvil Face w/ Glowing Anchor
RUNIC CONDUIT ARRAY:	Proto-Dravidian & San Acoustic Channels Along Bulwark Frieze
PRIMARY BOILERS:	Twin 1944 Loch-Class Admiralty 3-Drum Marine Steam Boilers
CONDENSER SYSTEM:	Dwg No. 014 Twin-Pass Marine Steam Condenser (Cu-Ni Tubes)
AUXILIARY THRUST:	Submerged Venturi Keel Hydro-Jets (140 kt Slipstream Flank)

III. NAVIGATION & ARCHIVAL PROVENANCE

HELM BINNACLE:	1630 São Gonçalo Orichalcum Astrolabe
BALLAST KEY:	Solly Levin's Quicksilver Core Governor
DRIVING SAW:	1860 SS Truro Isikali Star-Iron Saw
GRAVING DOCK:	Maydon Wharf Berth 08 / Salisbury Island
FIRST LAID DOWN:	Nov 1860 (Port Natal) / Refit 1944 (WWII)
RE-COMMISSIONED:	Equinox 1988 — Port of Durban, KZN
ARCHIVE PORTAL:	www.astromythologist.com

SOUTH AFRICAN RAILWAYS & HARBOURS
PORT NATAL GRAVING DOCK ARCHIVE

THE BEHEMOTH'S ANVIL

The Creation of Legends — Volume I: The Shattered Garden

DWG NO.:	BA-1860-1944-001 (A3 MASTER SHEET)
DRAWN BY:	H. Ramith (Master Artificer, 1978)
CHIEF ENGR:	D. van Blerk (Berth 08 Graving Dock)
SIGNED OFF:	(H. RAMITH • DIRK VAN BLERK)

H. Ramith Dirk van Blerk

ARCHIVE: www.astromythologist.com | ISBN 978-1-0483-8503-8

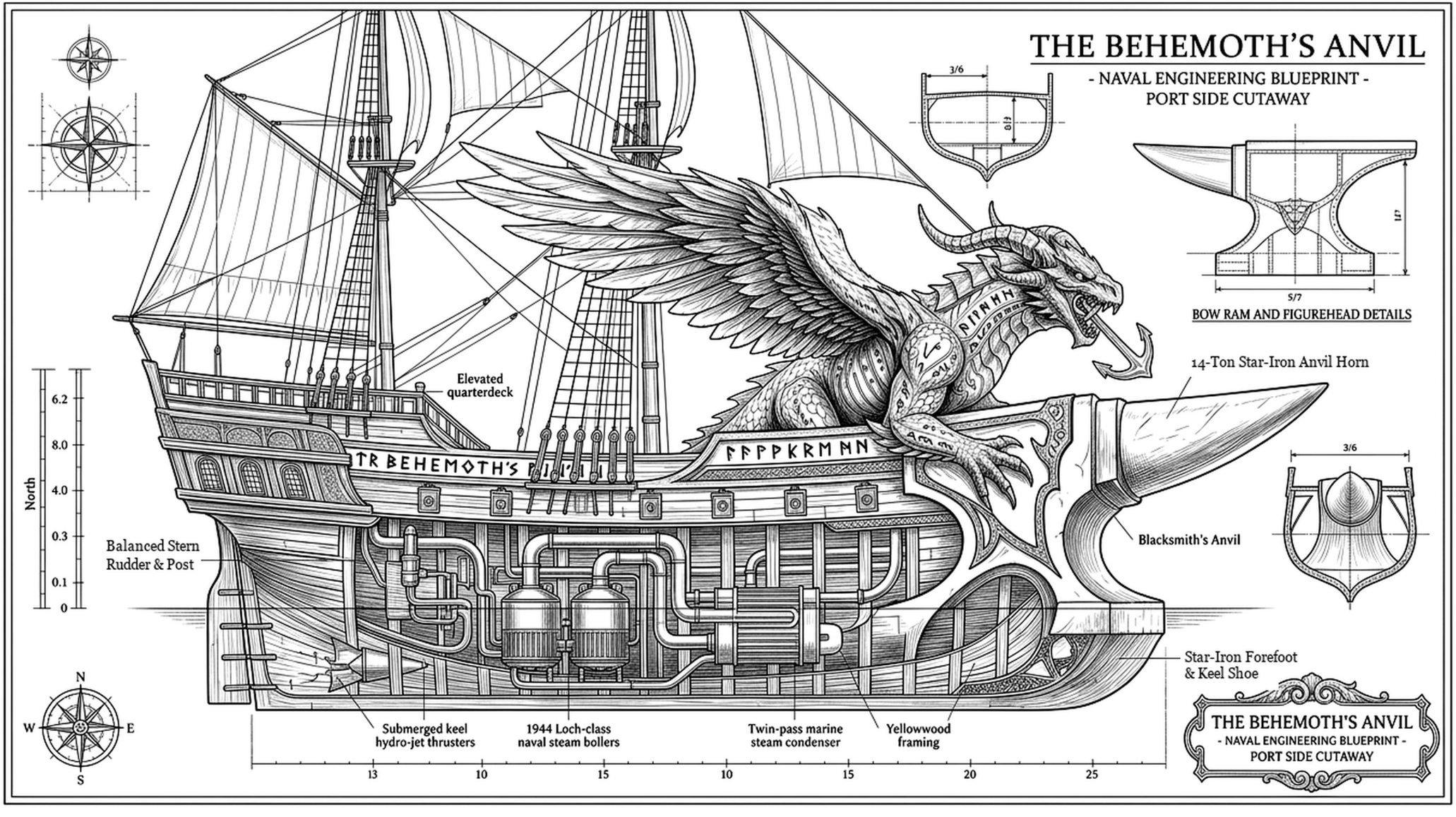

I. PRINCIPAL PARTICULARS (DWG NO. BA-1860-1944-001)

LENGTH OVERALL (LOA):	248 ft 6 in (incl. Anvil Bow-Ram)
EXTREME BEAM / DRAUGHT:	38 ft 4 in Beam | 16 ft 8 in Loaded
DISPLACEMENT:	1,840 Tons Full Ocean Displacement
ACOUSTIC FRAMING:	Seasoned Outeniqua Yellowwood Ribs
EXTERIOR ARMOUR:	1860 SS Truro Bronze & 1944 Frigate Steel
BALLAST PENDULUM:	Hanny Ramith Plumb-Line & Mercury Core

II. BOW-RAM, FIGUREHEAD & PROPULSION PLANT

PROW BOW-RAM:	14-Ton Monolithic Star-Iron Blacksmith's Anvil
FIGUREHEAD:	Winged Dragon-Chimera w/ Star-Iron Anchor
BULWARK RUNES:	Proto-Dravidian & San Harmonic Channels
STEAM PLANT:	Twin 1944 Loch-Class Admiralty Boilers
CONDENSER:	Dwg No. 014 Twin-Pass Cu-Ni Steam Condenser
HYDRO-JETS:	Submerged Keel Venturi Jets (140 kt Flank)

III.MAYDON WHARF BERTH 08 SIGN-OFF

VESSEL:	THE BEHEMOTH'S ANVIL (DWG 001)
GRAVING DOCK:	Maydon Wharf Berth 08, Durban Harbour
DRAWN BY:	H. Ramith (Master Artificer, 1978)
DOCKMASTER:	Dirk van Blerk (Chief Boilermaker)
SIGNED OFF BY:	H. Ramith & Dirk van Blerk

H. Ramith — H. RAMITH (1978)

Dirk van Blerk — DIRK VAN BLERK (1988)

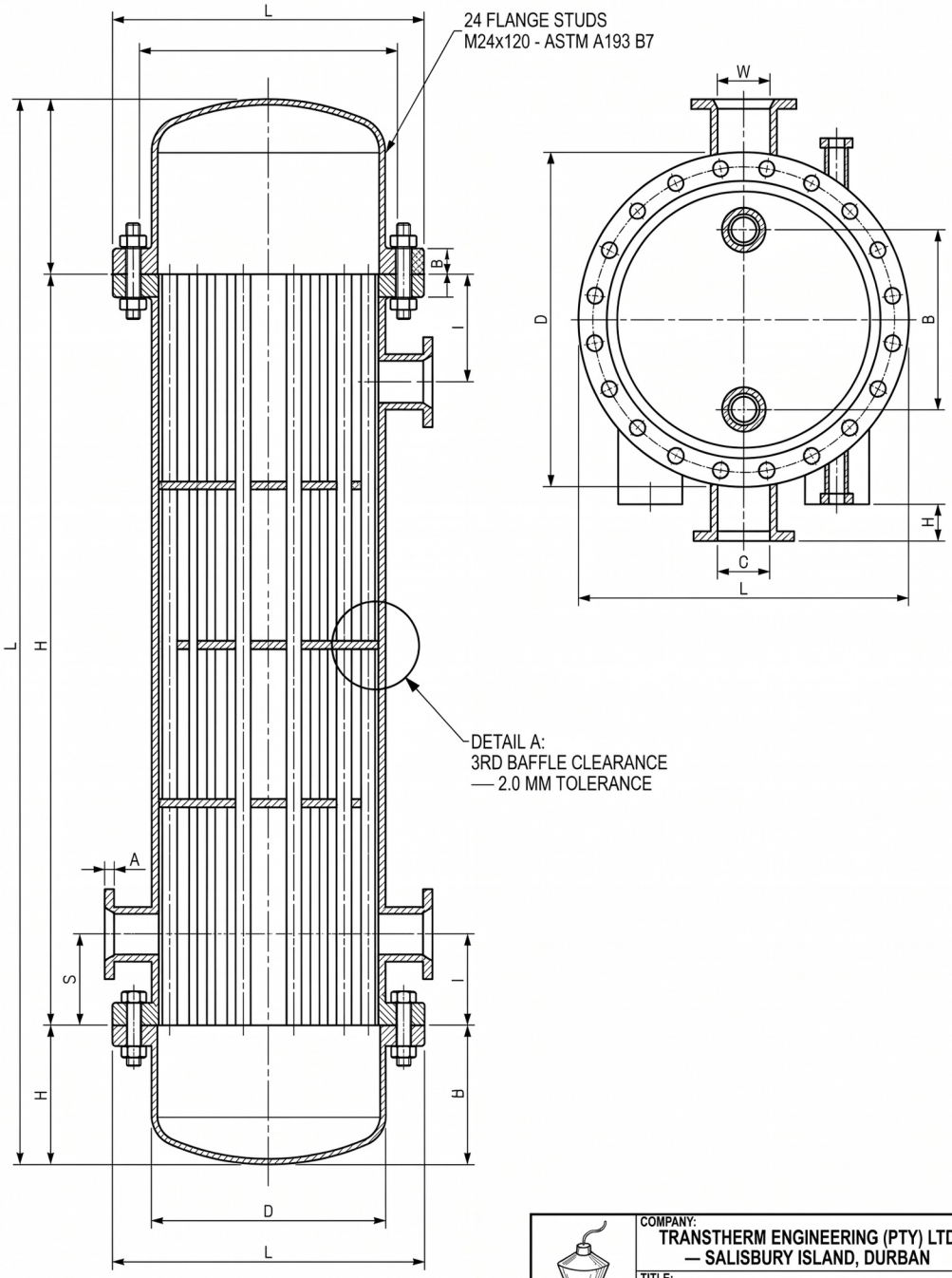

COMPANY:	TRANSTHERM ENGINEERING (PTY) LTD — SALISBURY ISLAND, DURBAN
TITLE:	TWIN-PASS MARINE STEAM SUPERHEATER & CONDENSER
DATE: 24 OCT 1995	DWG NO. DRAWING NO. 014 — FINAL REVISION
DRAWN BY: M. RAMITH (APPRENTICE DRAUGHTSMAN)	SCALE: SCALE: 1:10 / NTS
CHECKED & APPROVED BY: (R.J.K. WARKER • H. HAWLAND • P. PAYPE)	R.J.K. Warker H. Hawland P. Paype
STAMPED NOTE:	ZERO DEFECTS FOUND — WE'VE GOT THE WATCH

THE BUILDER'S COMPASS

(THE ORICHALCUM ASTROLABE OF THE FIRST ARCHITECTS)

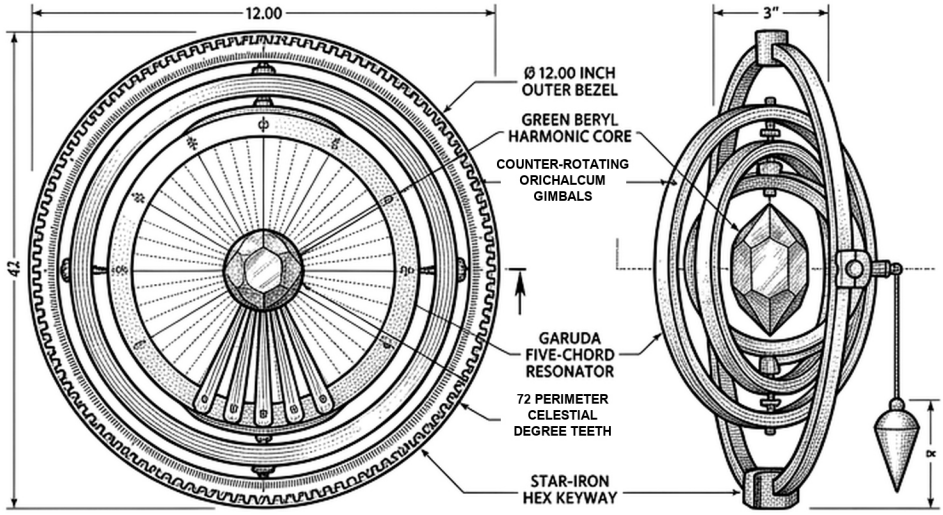

DETAILED TOP PLAN VIEW

CROSS-SECTIONAL SIDE ELEVATION

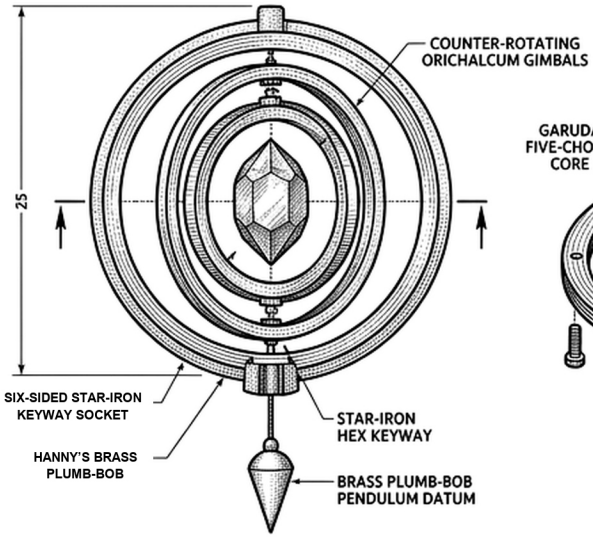

FRONT HARMONIC ELEVATION

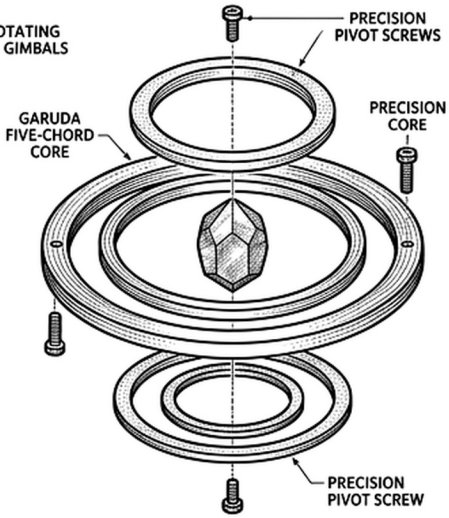

ISOMETRIC EXPLODED MECHANICAL DIAGRAM

THE BUILDER'S COMPASS — PLANETARY KEYSTONE GOVERNOR (SEALS I–VII)

APPROVED & SEALED BY THE SIX FAITHFUL PRIMORDIAL ARCHITECTS OF AUR-VARD:

Oramen
(The First Father)

Aethelgard
(Warden of the Northern Ice) ᛚᛉᚨᛁ ᚨ·ᛟ·ᚨ

Makhulu
(Keeper of the Mountain Root) ᚦᚢᛁ·ᚻ

Solvath
(Keeper of the Solar Crucible)

Thalassor-Prime
(Lord of the Abyssal Trenches) ᚦᚨᛉ·ᚨ

Kaelen
(Master of the Continental Veins)

THE KWAZULU-NATAL KEYSTONE SURVEY

Kaapvaal Craton Geomagnetic Fault-Line & Topographical Ledger

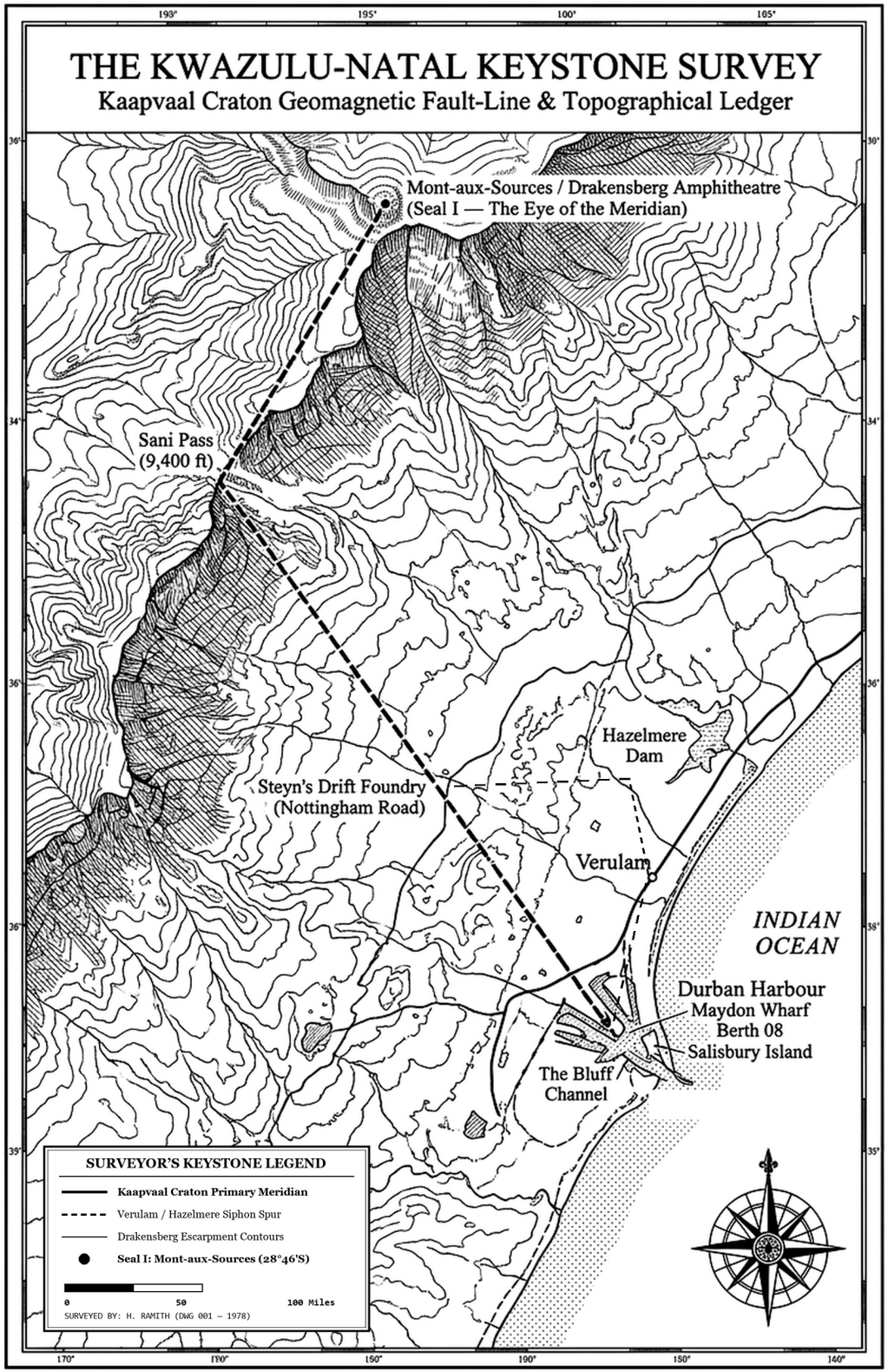

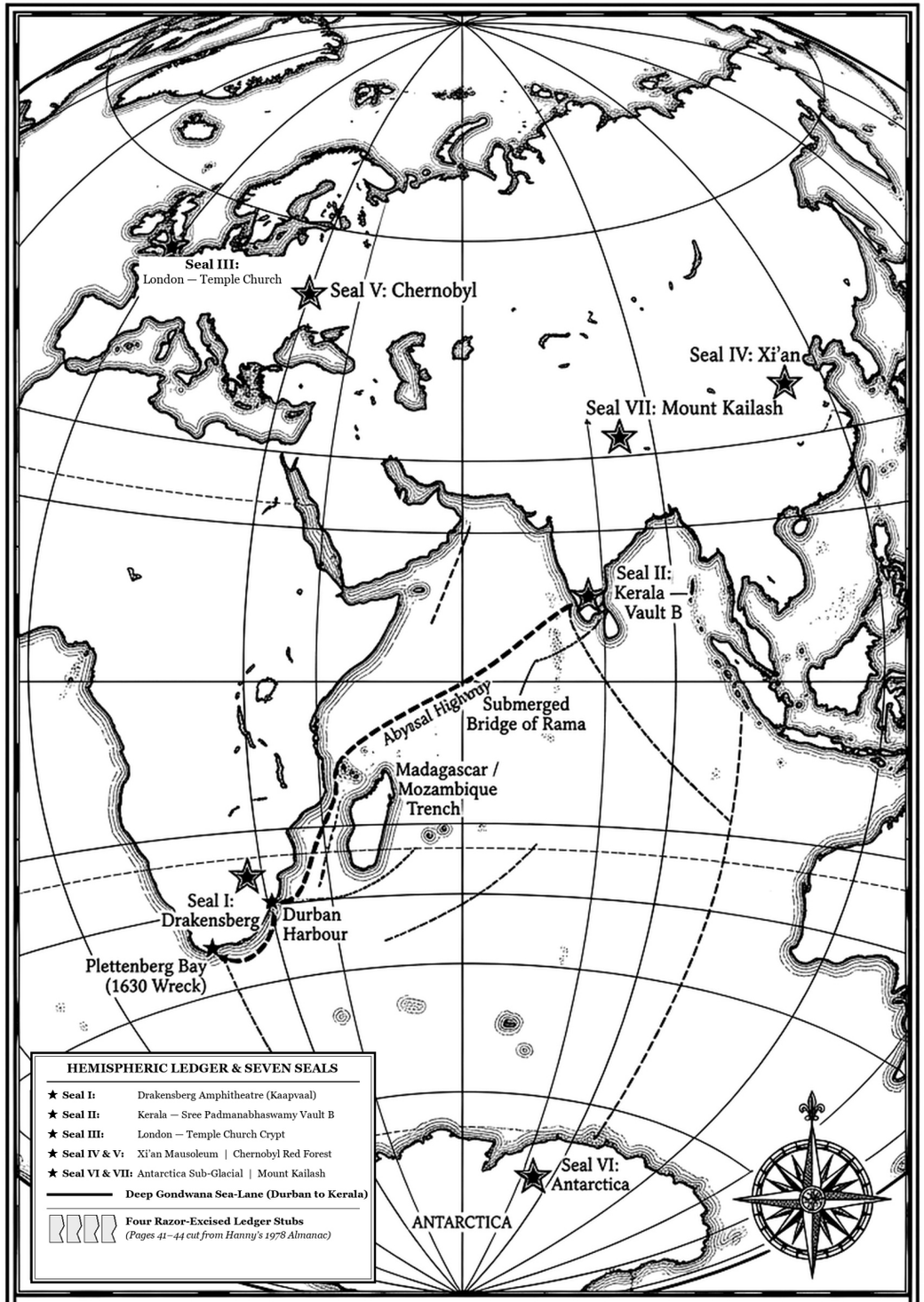

THE SEVEN SEALS & GONDWANA SEA-LANE

Hanny Ramith's Hemispheric Projection & Abyssal Navigation Chart